Technical data sheet

90° vertical bend, rising, 85 FS

Item number: 7007246

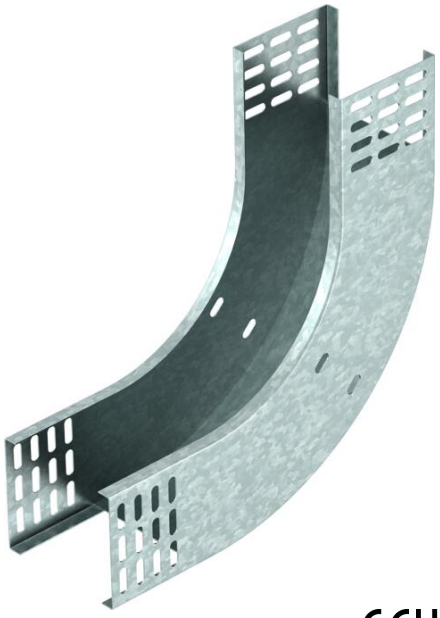

90° rising vertical bend, for all cable tray types of 85 mm side height.
The vertical bend is pushed over the end of the cable tray and screwed tight.
Fastening materials should be ordered separately.

St	Steel
FS	Strip galvanised

Master data

Item number	7007246
Type	RBV 850 S FS
Description 1	90° vertical bend
Description 2	rising
Manufacturer	OBO
Dimension	85x500
Colour	zinc
Material	Steel
Surface	Strip galvanised
Surface standard	DIN EN 10346
Smallest sales unit	1
Unit of quantity	Piece
Weight	203.5 kg
Weight unit	kg/100 pc.
CO2 Footprint (GWP) Cradle-to-Gate	8,734 kg CO2e / 1 Piece

Technical data sheet

90° vertical bend, rising, 85 FS

Item number: 7007246

Dimensions

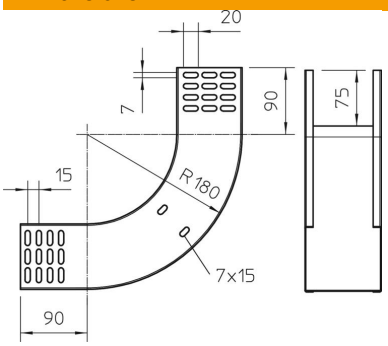

Width	500 mm
Width	20 in
Height	85 mm
Height	3 in
Plate thickness	1 mm
Dimension B	500 mm

Technical data

Bend (angle)	90°
Connector version	Without connectors
Maintain electrical functions	no
Mounting perforation in base	no
NATO hole pattern	no
Change of direction	Vertical rising
ROHS-conformant	yes
Rustproof steel, pickled	no
Side perforation	no
Wide-span version	no
Type of connector, cable support system	Screwed