Technical data sheet

T piece 85 FS

Item number: 6038216

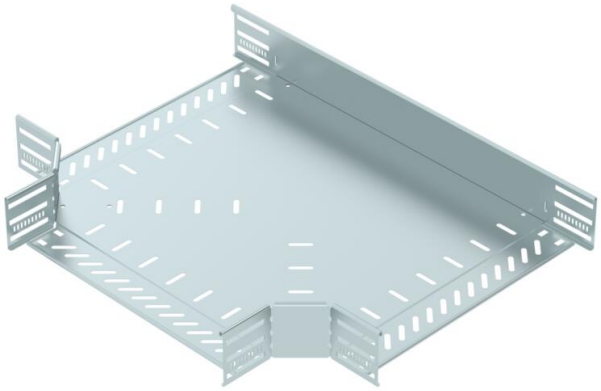

T piece for the creation of a horizontal branch, fitting for lock and screw-on cable trays of side height 85 mm. Screwless mounting with double clamps or screw connection with FRS truss-head screws and M6 combination nuts. Can be used in indoor areas. Fastening material must be ordered separately.

NEW

St	Steel
FS	Strip galvanised

Master data

Item number	6038216
Type	RT 840 FS
Description 1	T piece
Description 2	for cable tray, horizontal
Manufacturer	OBO
Dimension	85x400
Colour	zinc
Material	Steel
Surface	Strip galvanised
Surface standard	DIN EN 10346
Smallest sales unit	1
Unit of quantity	Piece
Weight	321.7 kg
Weight unit	kg/100 pc.
CO2 Footprint (GWP) Cradle-to-Gate	11,249 kg CO2e / 1 Piece

Technical data sheet

T piece 85 FS

Item number: 6038216

Dimensions

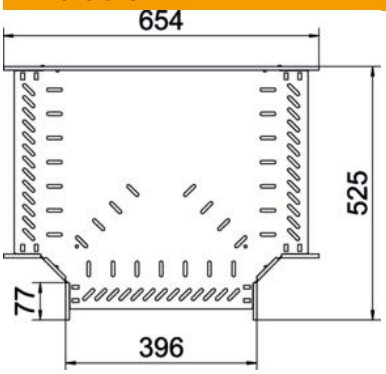

Width	400 mm
Height	85 mm
Plate thickness	1 mm
Dimension B	400 mm

Technical data

Connector version	Integrated connector
Maintain electrical functions	no
NATO hole pattern	no
ROHS-conformant	yes
Rustproof steel, pickled	no
Permitted temperature range, max.	120 °C
Permitted temperature range, min.	-20 °C
Wide-span version	no
Type of connector, cable support system	screwed/clamped
Recommended quantity of bolts	27 St.
Rail thickness	1.25 mm